PDF Complete
Your complimentary use period has ended. Thank you for using PDF Complete.
Click Here to upgrade to Unlimited Pages and Expanded Features

第35回宝ヶ池少年野球交流大会

5年生の部

TEL 701−6248
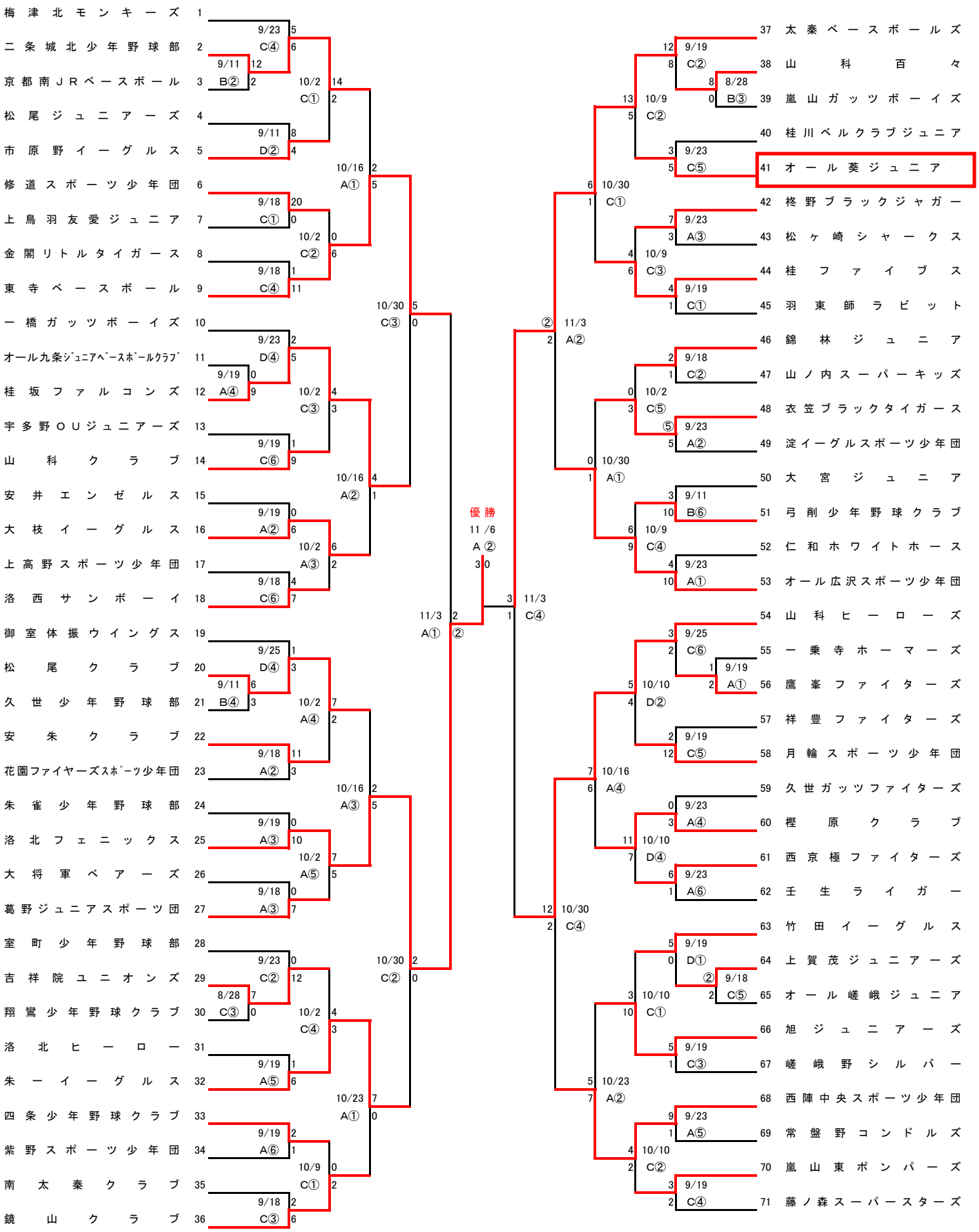
① 8:30　② 10:00　③ 11:30　④ 13:00　⑤ 14:30　⑥ 16:00